Product Data Sheet

TWT, U/UTP, Category 5e, twisted-pair cable, 4-pair, unshielded, LSZH, white, 305 m

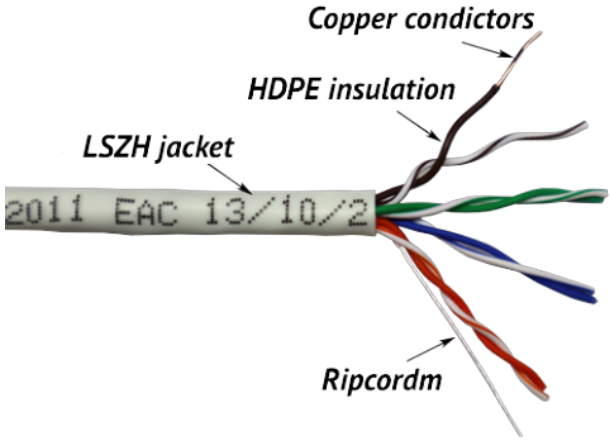

Part Number: TWT-5EUTP-XL-LSZH

TWT, U/UTP, Category 5e, twisted-pair cable, 4-pair, unshielded, LSZH, white, 305 m for copper structured cabling systems. LANMASTER product information, specifications and part number details.

Description

TWT, U/UTP, Category 5e, twisted-pair cable, 4-pair, unshielded, LSZH, white, 305 m. Product for LANMASTER copper structured cabling systems. Use in twt cables applications according to the project design and product specifications.

Part Numbers

TWT-5EUTP-XL-LSZH	TWT, U/UTP, Category 5e, twisted-pair cable, 4-pair, unshielded, LSZH, white, 305 m

Specifications are subject to change without notice. For the most current information, consult LANMASTER or an authorized LANMASTER partner/distributor.