Паспорт изделия

Cable clamp base, plastic

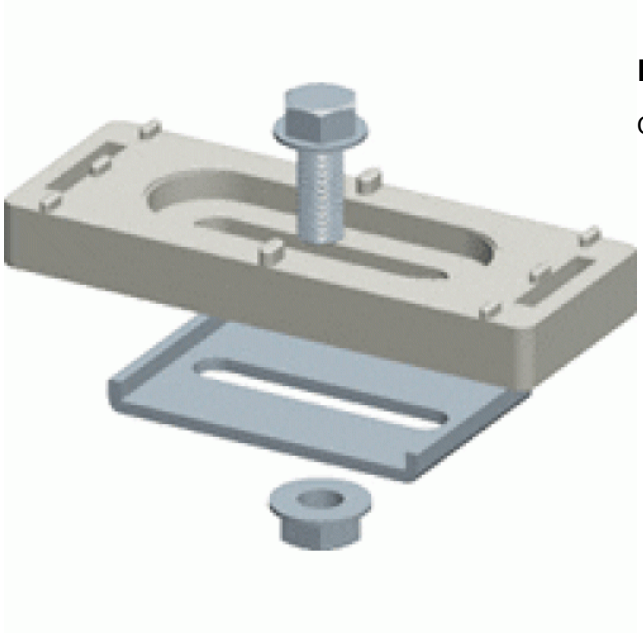

Product Code: LAN-MT-FBS

Cable clamp base, plastic

Description

Purpose:

- fastening cables in a tray,
- used for 5mm-7mm cable diameter.

Tray wire diameter:

- 3.5 mm – 6.0 mm.

Features:

- ease of installation,
- suitable to all types of trays.

Kit includes:

- bottom plate - 1 pc.,
- top plate - 1 pc.,
- screw - 1 pc.,
- nut - 1 pc.

Model range

LAN-MT-FBS	Cable clamp base, plastic

Product descriptions are listed according to the available information at the time of publication. Product specifications can be changed without advanced notification. More detailed and exact information can be obtained from the official partners and distributors of LANMASTER.