Паспорт изделия

The DC series floor cabinet is intended for 19" equipment installed on two or four mounting rails. Extended (800mm) width model allows easy equipment cable management.

Product Code: LAN-DC-CBP-xxU-8xy

The DC series floor cabinet is intended for 19" equipment installed on two or four mounting rails. Extended (800mm) width model allows easy equipment cable management.

Description

The LANMASTER DC series of cabinets is designed to meet the special requirements and features of the operation in Data Centers. The load-bearing frame is designed for increased static load, up to 1500 kg per cabinet. Profiled doors, with a perforation ratio exceeding 80%, provide efficient cooling of equipment installed in the cabinet.

The rear doors of the cabinet are split. This door design saves space in the server room and provides convenient access for servicing the equipment installed in the cabinet. The doors are equipped with locks, the front and rear doors can be interchanged. Only 400mm between the cabinet and the server room wall is enough to ensure free opening of the split rear door.

The design of the cabinet is optimized to minimize the installation time using of the SKD (Semi Knock Down) method with a reduced number of operations.

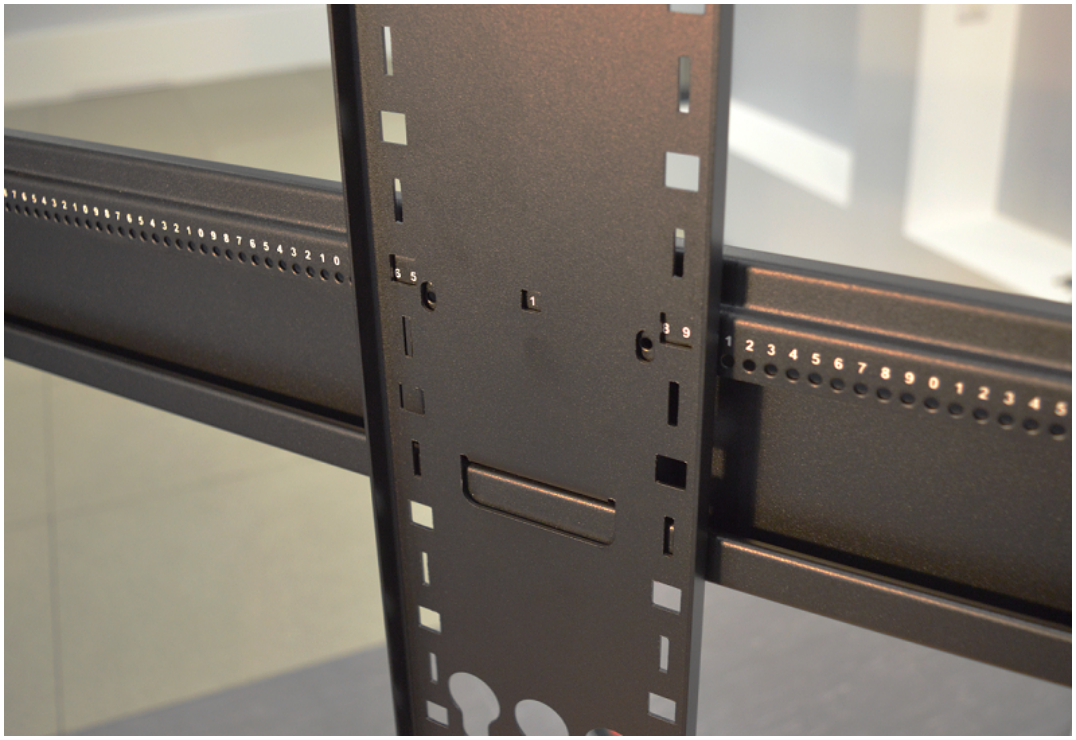

The horizontal rails are marked with clearly visible depth marks in 6.4mm increments, which helps to accurately set the vertical mounting rails in the same position on different sides of the cabinet. Vertical mounting rails are marked in RMU for precise installation of equipment in height.

Reinforced mounting rails have an increased width for 800 mm width cabinets. This provides additional opportunities for organizing high volume and density cabling. The mounting rails position can be adjusted in depth, even in an assembled cabinet.

The rails have holes for cable routing. The side airflow along the equipment is enhanced with open holes. If necessary, they can be closed with brush entries, this will block the air flow and still allow you to freely lead cables into the interior of the cabinet.

High-capacity LAN-DC-CB-xxUx8-VO1x cable managers have been specially developed for this cabinet. They are installed on mounting rails and have openings for cable entry at the rear, top and bottom, and provide cable support at the rack mount unit level.

There are holes for cable entries along the perimeter of the cabinet roof, which allows cables to be brought into the cabinet from any side. The side roof cable entries have plastic caps, the front and rear cable entries can be protected by brush panels.

Inside the cabinet, the cables can be fixed on the vertical trays supplied with the cabinet. The trays are also great for placing PDUs (Zero U) as they have keyholes for quick mounting of vertical PDUs.

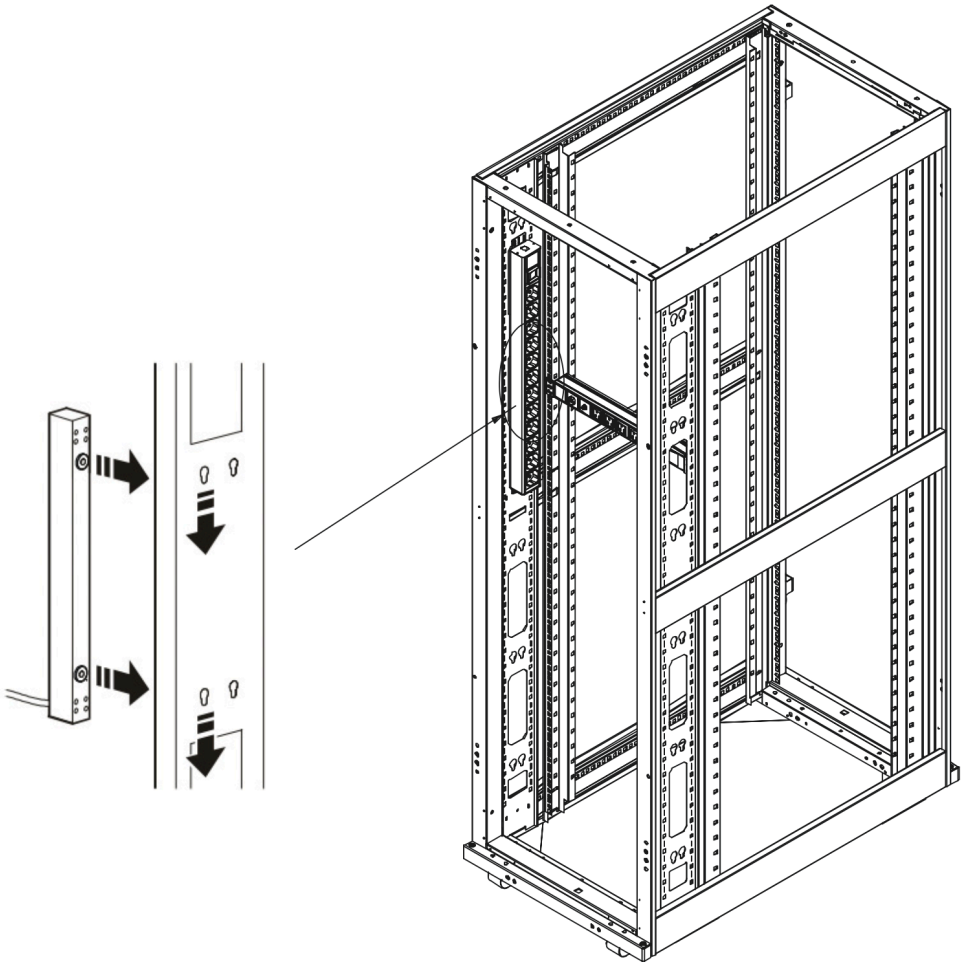

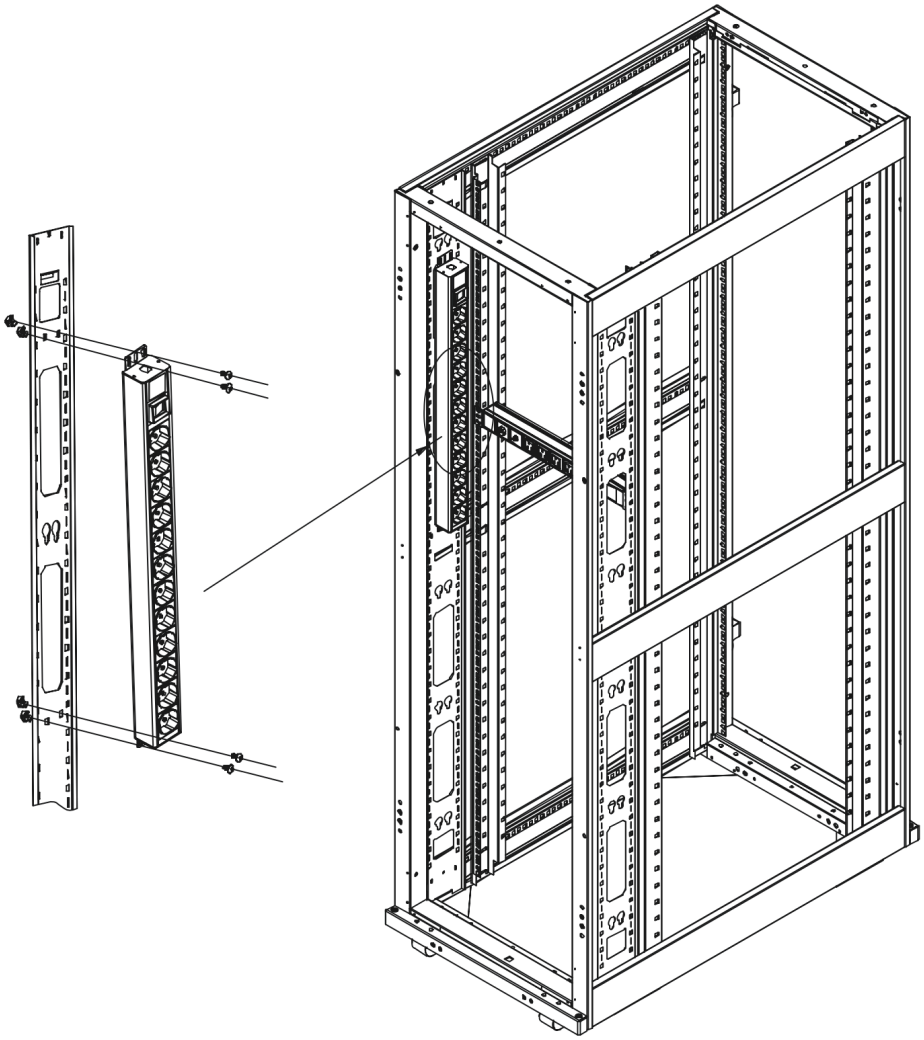

Side panels **(not supplied with the cabinet)** are quick-detachable, equipped with a lock and a latch. To facilitate handling and provide convenient access to equipment quick-release side panels are divided in height, can be dismantled independently of each other, and are light in weight.

Brackets for bolting the cabinet to the floor supplied within the package. With the brackets, the cabinet can be securely fastened to the floor at the place of its installation.

Cabinets installed in a row can be interconnected with baying fasteners, thereby giving them additional stability. Grounding wires and baying fasteners for joining cabinets in a row are included in the cabinet kit. Cabinets are delivered disassembled in two boxes.

Product Code	Cabinet Height	Cabinet Dimensions (WxDxH) mm	Package Dimensions, mm Box 1	Box 2	Package Volume, m^3	Cabinet weight (net/gross), kg

LAN-DC-CBP-42Ux8x10	42U	800 x 1070 x 1992	2075 x 260 x 820	1970 x 315 x 155	0,54	116,0/127,4
LAN-DC-CBP-42Ux8x12	42U	800 x 1200 x 1992	2075 x 260 x 820	1970 x 315 x 155	0,54	122,0/136,0
LAN-DC-CBP-48Ux8x10	48U	800 x 1070 x 2259	2315 x 260 x 820	2230 x 315 x 155	0,60	128,0/140,0
LAN-DC-CBP-48Ux8x12	48U	800 x 1200 x 2259	2075 x 260 x 820	1970 x 315 x 155	0,54	134,0/144,0

Model range

LAN-DC-CBP-42Ux8x10	LANMASTER DC Cabinet, 42U 800x1070 mm, perforated doors, without side panels, black
LAN-DC-CBP-42Ux8x12	LANMASTER DC Cabinet, 42U, 800x1200 mm, perforated doors, without side panels, black
LAN-DC-CBP-48Ux8x10	LANMASTER DC Cabinet, 48U, 800x1070 mm, perforated doors, without side panels, black
LAN-DC-CBP-48Ux8x12	LANMASTER DC Cabinet, 48U, 800x1200 mm, perforated doors, without side panels, black

Product descriptions are listed according to the available information at the time of publication. Product specifications can be changed without advanced notification. More detailed and exact information can be obtained from the official partners and distributors of LANMASTER.